WINTEX AGRO

Innovative agricultural solutions

Spare parts catalogue Wintex 2000

WINTEX 2000

Wintex Agro, Vilhelmsborgvej 15, DK-7700 Thisted, +45 97990800
contact@wintexagro.com, www.wintexagro.com

WINTEX AGRO
Innovative agricultural solutions

Fixed frame

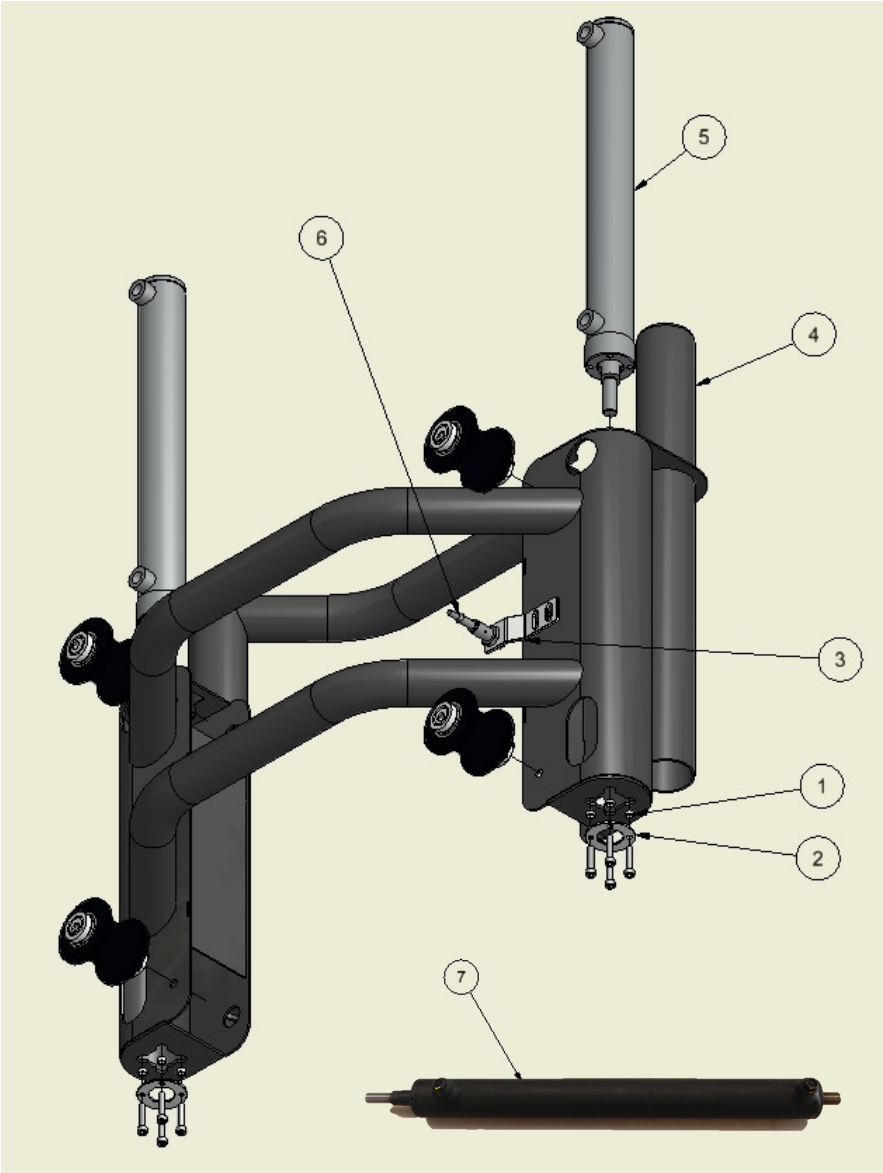

PART NO.	ART. NO.	DESCRIPTION
1	16101015	Spacer ring f. Jack cylinder
2	16101016	Cylinder washer
3	16101017	Sensor fitting
4	16101018	Fixed frame
5	16101020	Jack cylinder V12
6	16101021	Sensor
7	16101123	Hammer cylinder

Wintex Agro, Vilhelmsborgvej 15, DK-7700 Thisted, +45 97990800
contact@wintexagro.com, www.wintexagro.com

GUIDING ROLL

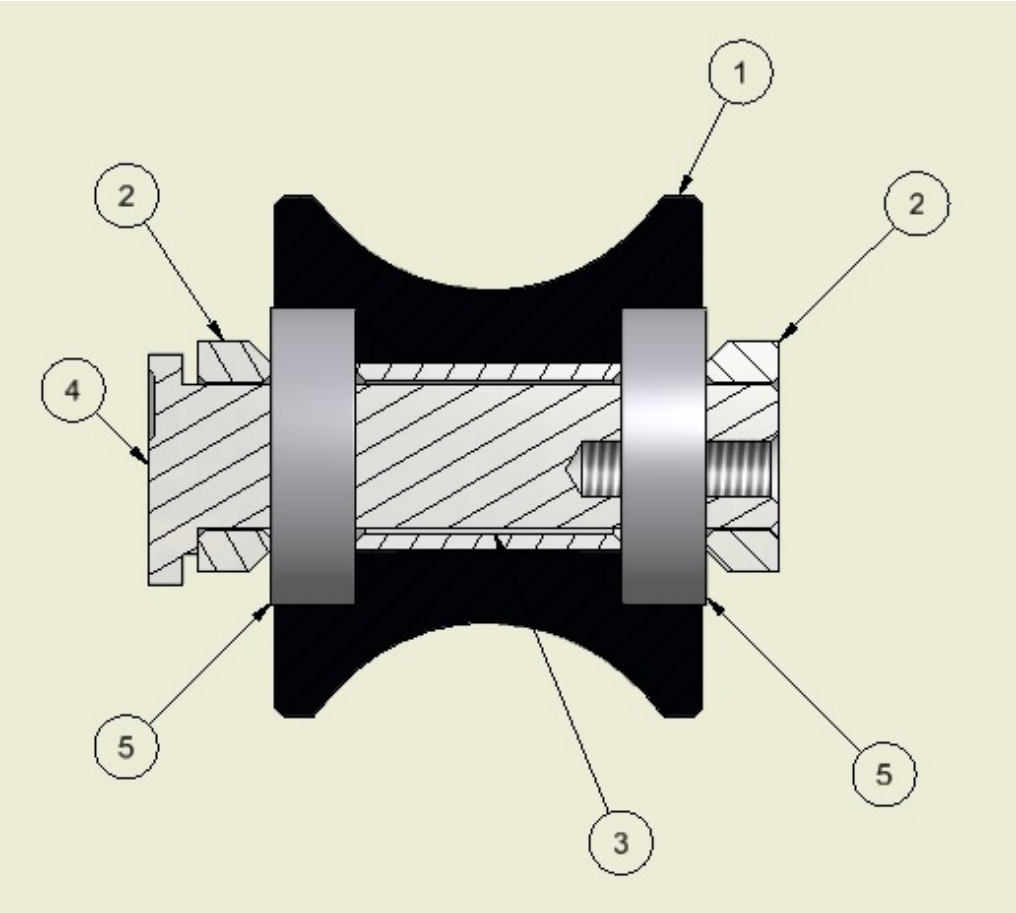

PART NO.	ART. NO.	DESCRIPTION
1	16101038	Guiding roll
2	16101063	Spacer ring guiding roll
3	16101064	Bushing
4	16101065	Eccentric bolt
5	16101066	1 bearing

LOWERING FRAME

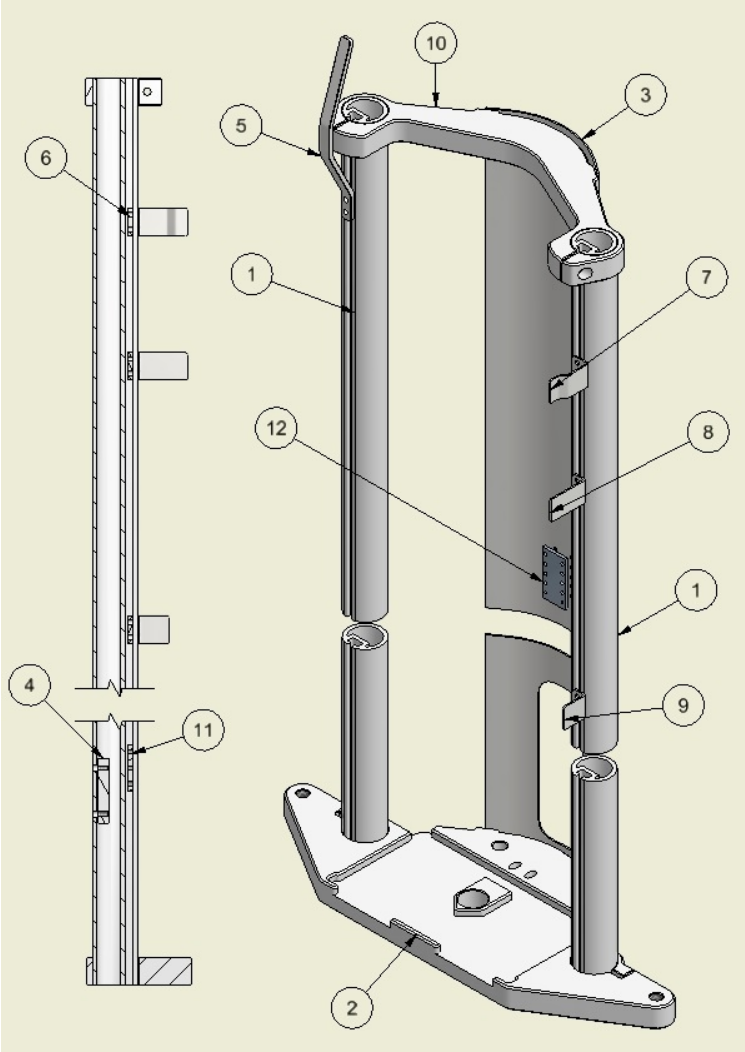

PART NO.	ART. NO.	DESCRIPTION
1	16101022	Guiding pipe
2	16101023	Bottom plate
3	16101031	Outer cover
4	16101025	Retaining plate f. scraper unit
5	16101026	Hose guide
6	16101027	Retaining plate M6-C16
7	16101028	Sensor plate1
8	16101029	Sensor plate 2
9	16101030	Sensor plate 3
10	16101024	Top plate
11	16101032	Key 3xM6
12	16101033	Chain fitting

SCRAPER UNIT

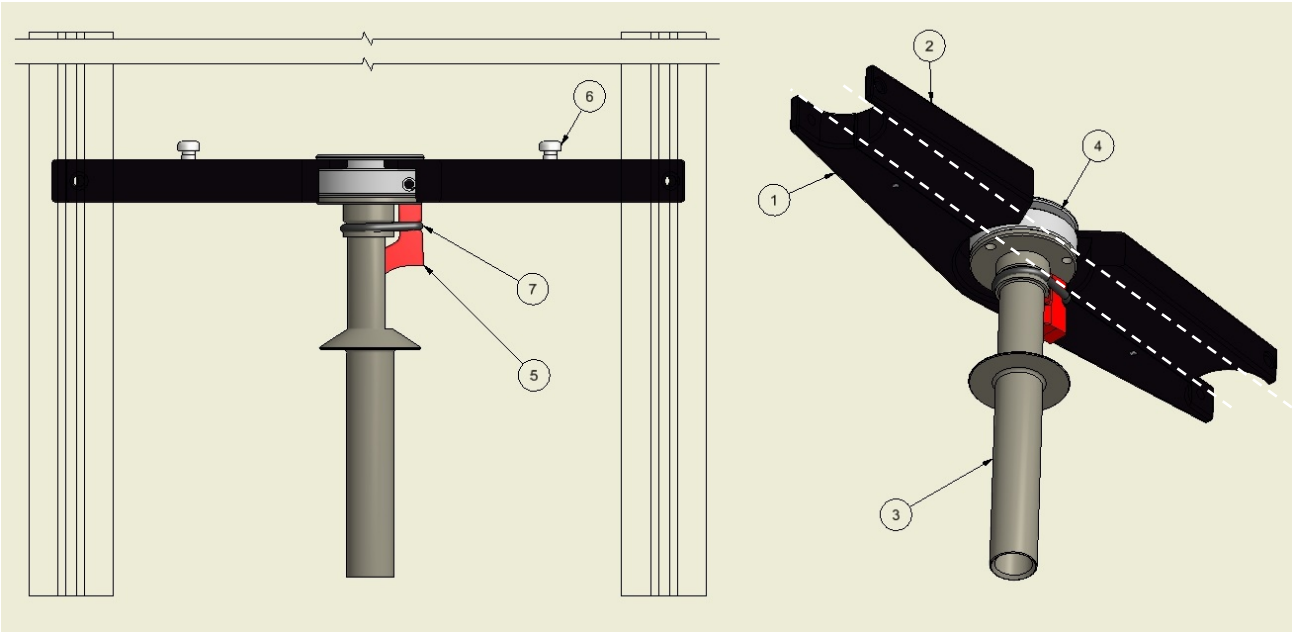

PART NO.	ART. NO.	DESCRIPTION
1	16101035	Retainer f. scraper unit, back
2	16101036	Retainer f. scraper unit, front
3	16101034-22	Steering pipe f. 22 mm probe
3	16101034-26	Steering pipe f. 26 mm probe
4	16101005-22	Revolving platform f. 22 mm probe
4	16101005-26	Revolving platform f. 26 mm probe
5	16101003-22	Scraper f. 22 mm probe
5	16101003-26	Scraper f. 26 mm probe
6	16101037	Fitted bolt 8x12 mm
7	16101004	O-ring f. scraper
-	16101039	Spring roll pin 8x30 mm

HAMMER CARRIAGE

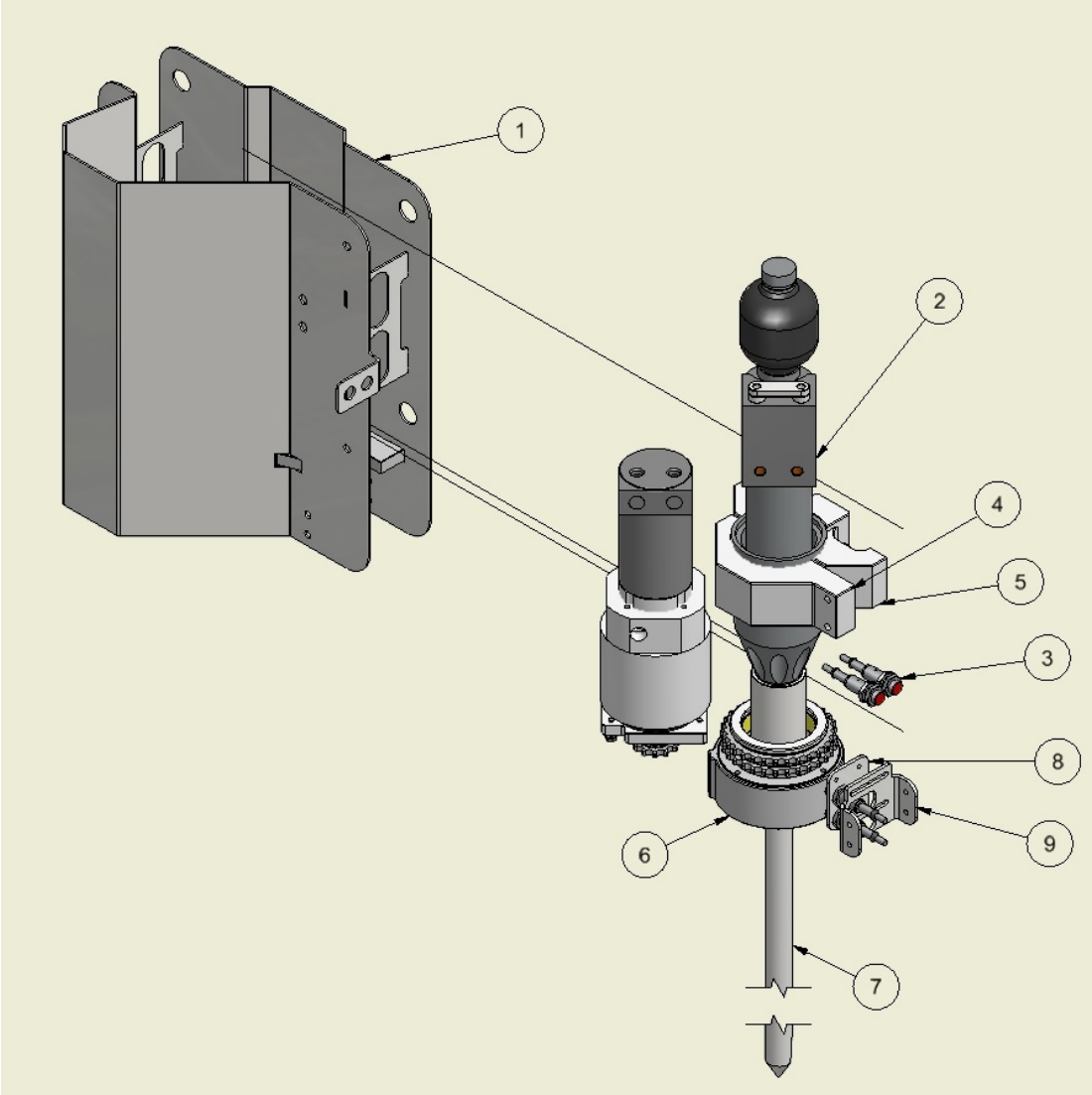

PART NO.	ART. NO.	DESCRIPTION
1	16101052	Motor carriage
2	16101055	Hydraulic hammer
3	16101021	Sensor
4	16101050	Hammer fitting A
5	16101051	Hammer fitting B
6	16101002-22	Rotary sensor plate f. 22 mm probe
6	16101002-26	Rotary sensor plate f. 26 mm ptobe
7	16101001-22	Probe, 22 mm
7	16101001-26	Probe, 26 mm
8	16101124	Adjusting plate f. sensor
9	16101135	Sensor retainer

HAMMER CARRIAGE

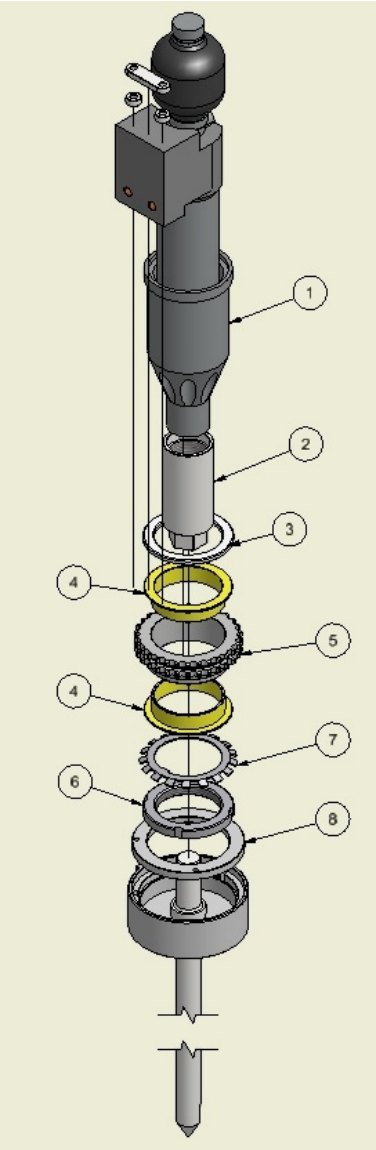

PART NO.	ART. NO.	DESCRIPTION
1	16101122	Bottom part hammer
2	16101049	Probe retainer
3	16101043	Spacer ring
4	16101044	Slide bearing
5	16101045	Gearwheel f. rotation, 30 teeth
6	16101006	Nut M60x2 mm
7	16101007	Lock washer
8	16101008	Spacer washer

HAMMER CARRIAGE

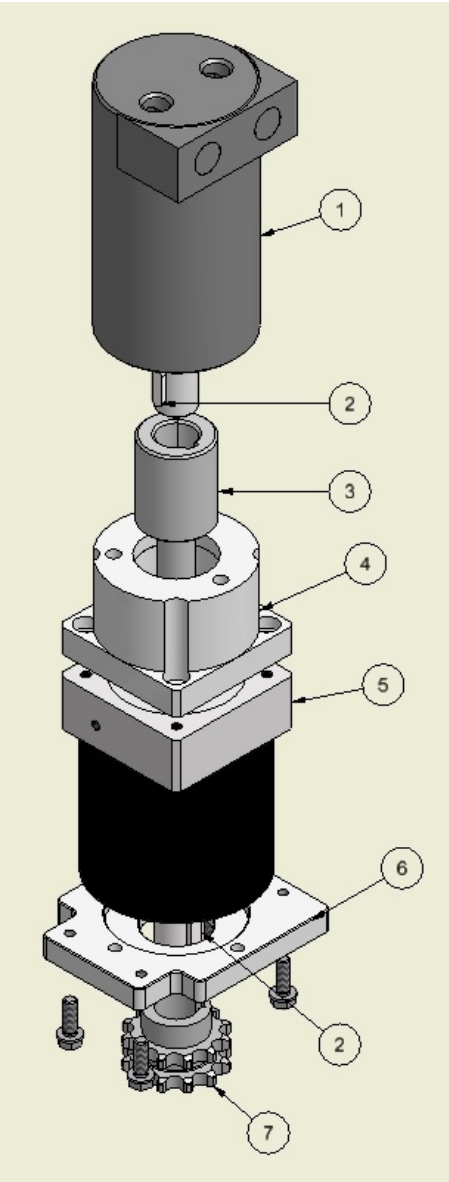

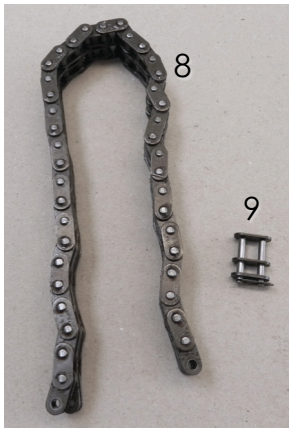

PART NO.	ART. NO.	DESCRIPTION
1	16101057	Oil motor
2	16101048	Parallel key f. gearwheel
3	16101042	Gear shaft
4	16101041	Gear adaptor
5	16101056	Planetary gear
6	16101060	Bottom plate hammer carriage
7	16101046	Gearwheel f. roation, 12 teeth
8	16101009	Chain f. rotation
9	16101012	Chain joint

CARRIAGE

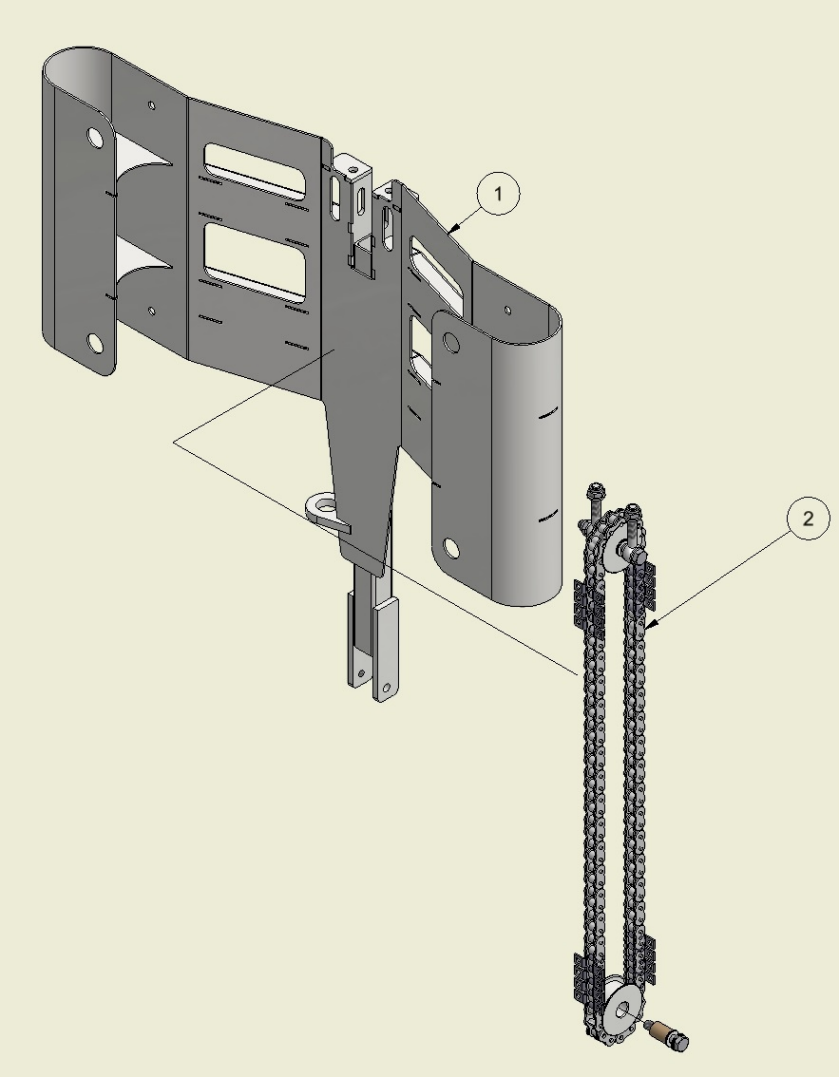

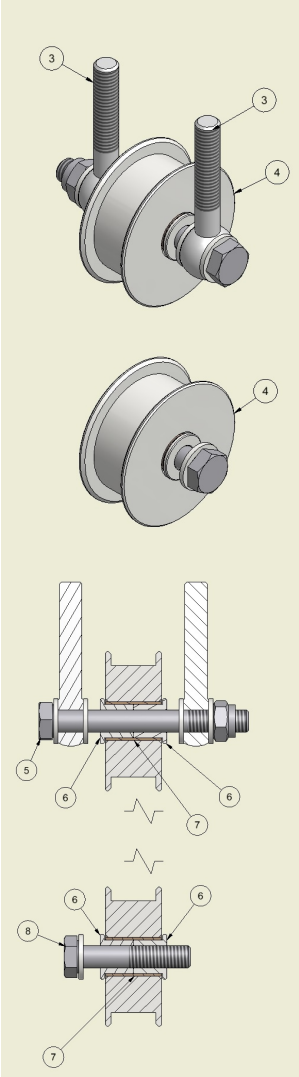

PART NO.	ART. NO.	DESCRIPTION
1	16101127	Carriage
2	16101128	Chain to guide
3	16101129	Eye screw
4	16101130	Sprocket wheel
5	16101131	Bolt, M8x70 mm
6	16101132	Bushing f. sprocket wheel
7	16101133	Anti-friction bushing
8	16101134	Bolt, M8x40 mm

SOILBOXES

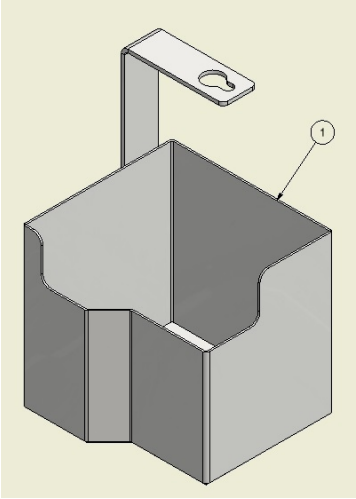

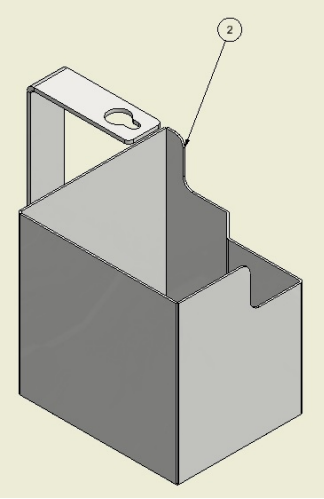

PART NO.	ART. NO.	DESCRIPTION
1	16101010	Soil box, left
2	16101011	Soil box, right

FUNNEL FOR EMPTYING

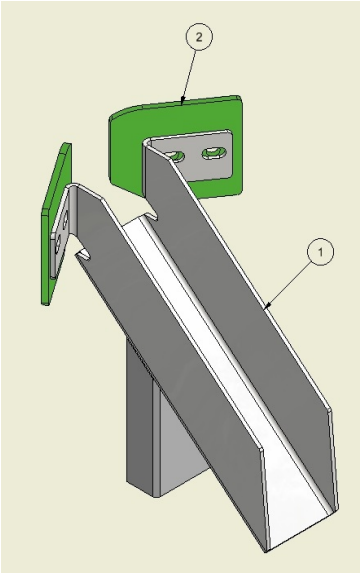

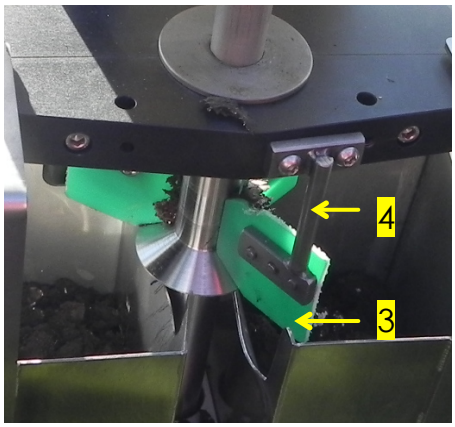

PART NO.	ART. NO.	DESCRIPTION
1	16101013	Retainer f. emptying
2	16101014	Scraper blade
3	16101125	Scraper blade 3
4	16101126	Retainer f. scraper blade 3

ELECTRICITY BOX

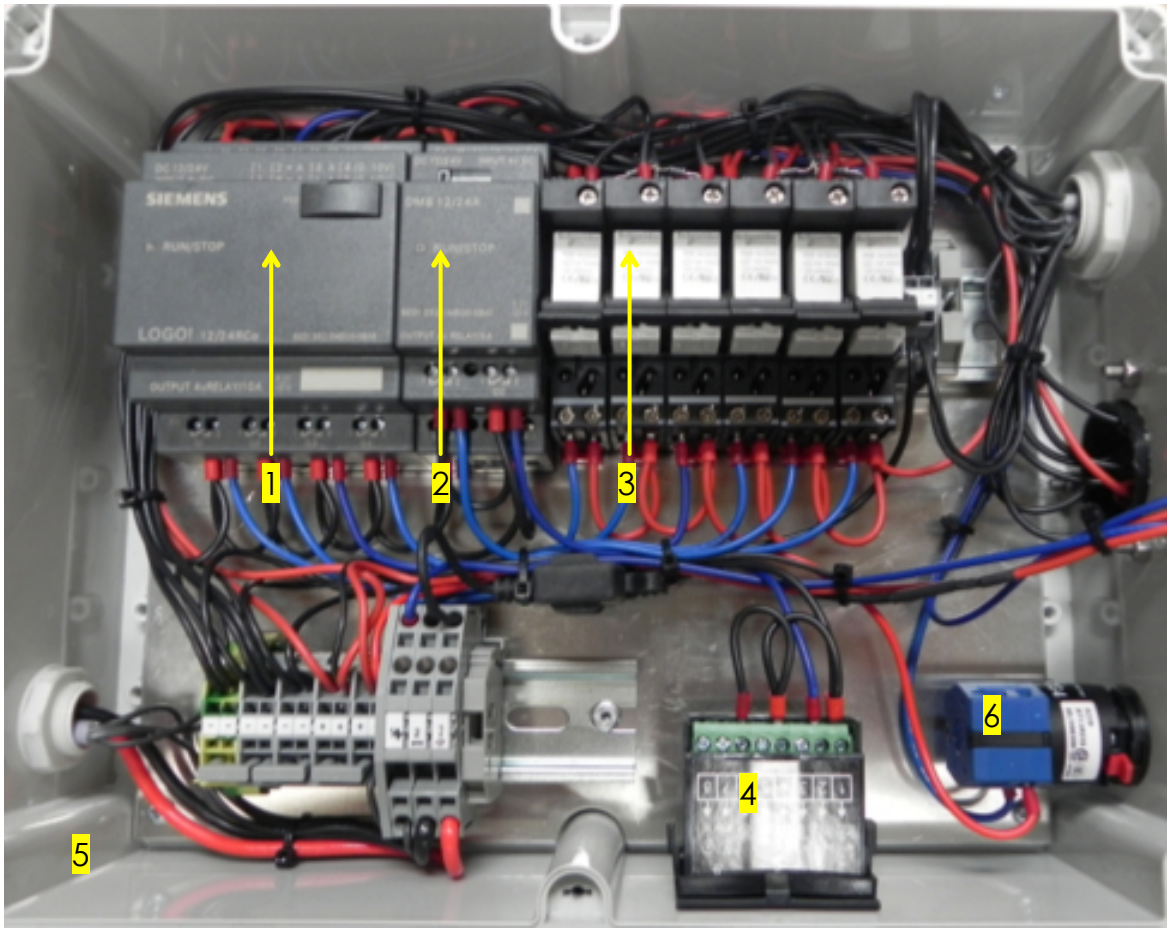

PART NO.	ART. NO.	DESCRIPTION
1	16101072	PLC-Logo w. programme
2	16101073	Logo extention
3	16101074	Plug-in relay 12 V
4	16101075	Counter
5	16101076	Electricity box complete
6	16101077	Switch 1-2

HYDRAULIC BLOCK WITH VALVES

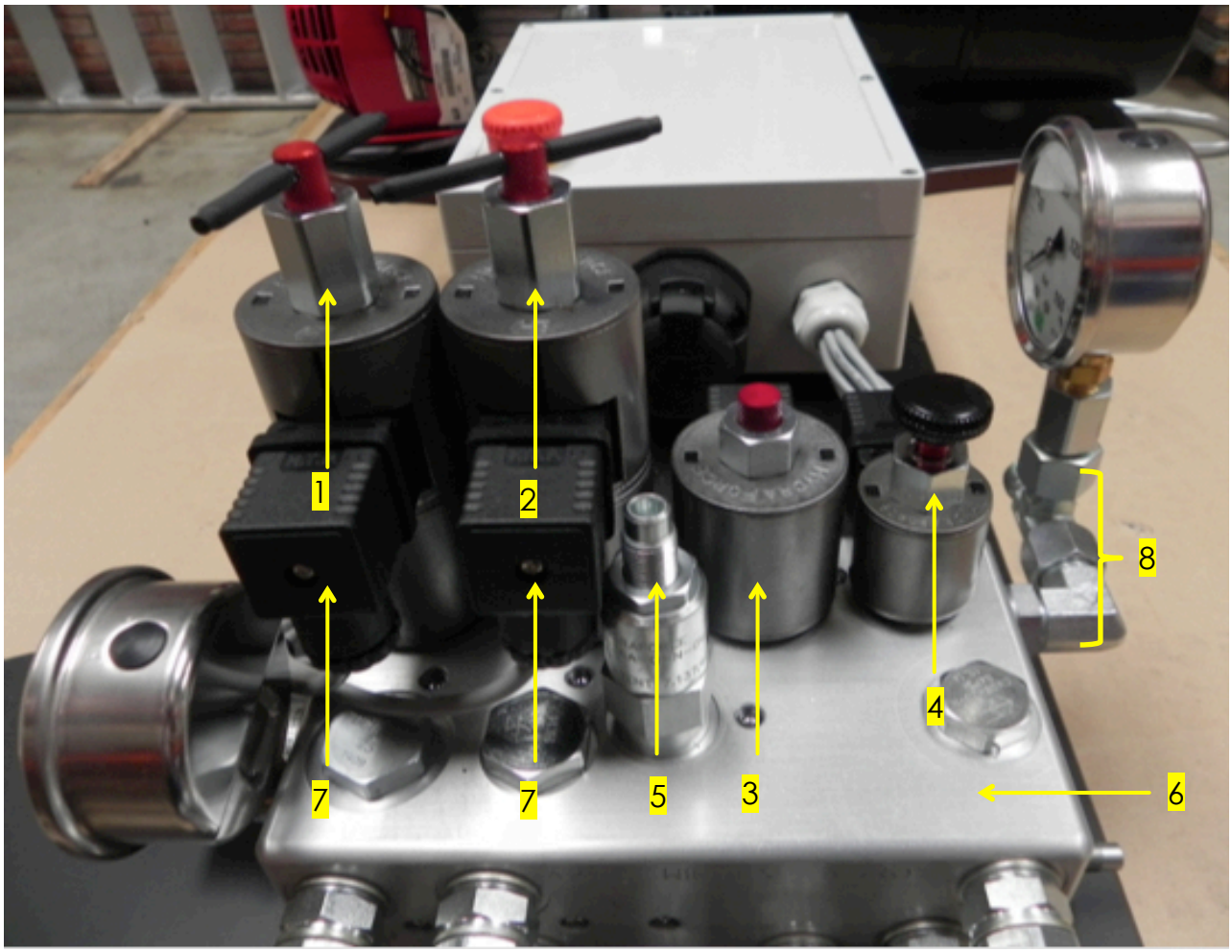

PART NO.	ART. NO.	DESCRIPTION
1	16101078	Valve coil lowering frame up/down
2	16101079	Valve coil probe up/down
3	16101080	Valve coil f. rotation
4	16101081	Main valve
5	16101082	Adjustable valve f. probe/hammer
6	16101083	Valve block
7	16101084	3-pole plug
8	16101085	Manometer connection

HYDRAULIC PUMP WITH TANK

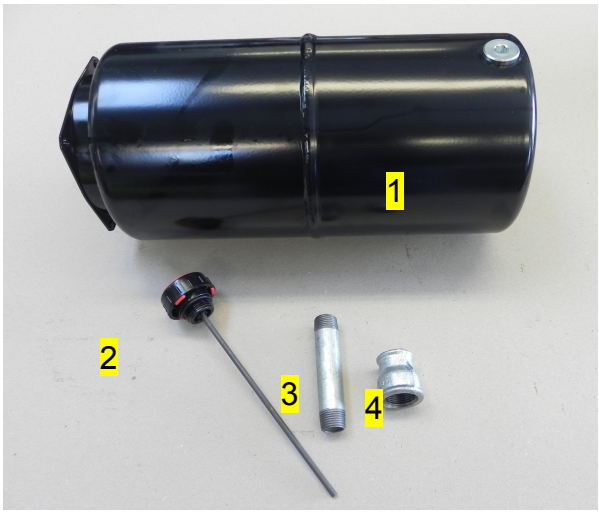

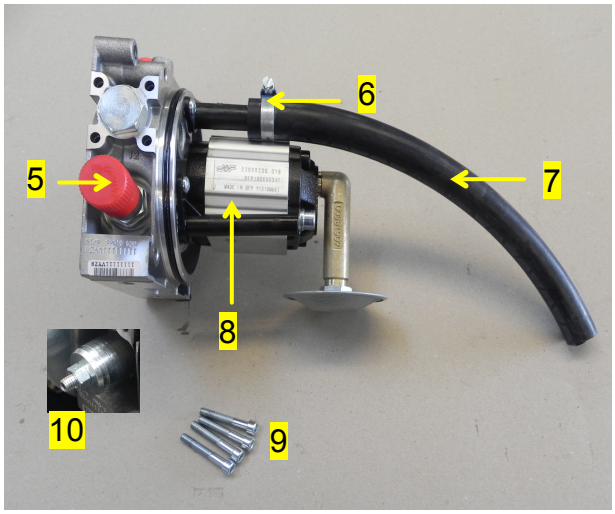

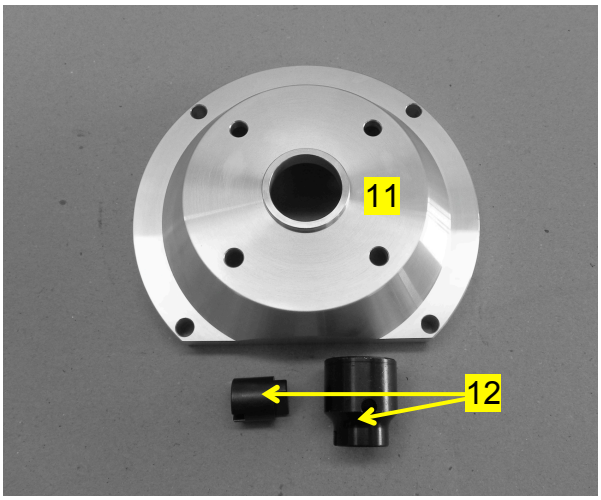

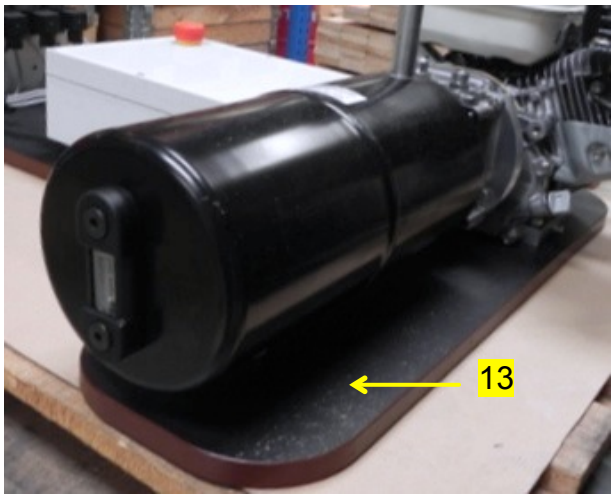

PART NO.	ART. NO.	DESCRIPTION
1	16101086	Oil tank, 8 l
2	16101087	Oil level rod w. filter cap
3	16101088	Nipple pipe 100 mm
4	16101089	Reduction ¾” to ½”
5	16101090	Cap f. excess-pressure valve
6	16101040	Band clamp
7	16101047	Return hose
8	16101053	Oil pump 6,3CC
9	16101054	Bolt, 6x40 mm
10	16101058	Excess-pressure valve
11	16101059	Flange
12	16101061	Motor coupling
13	16101062	Bottom plate f. hydraulic unit

HYDRAULICS

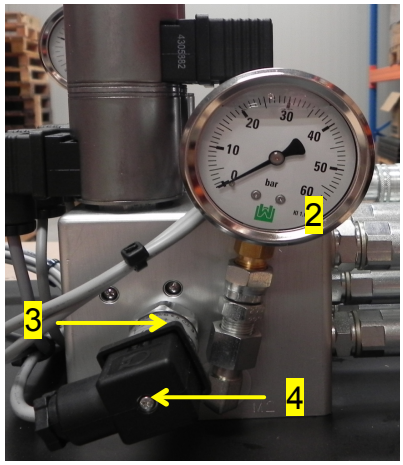

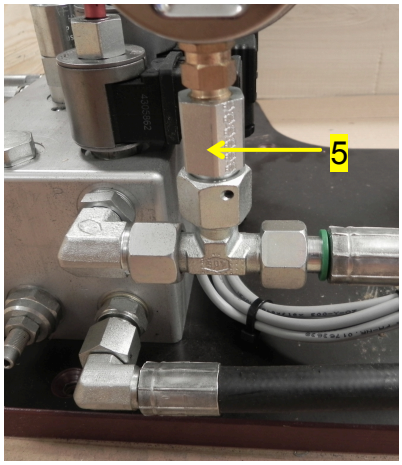

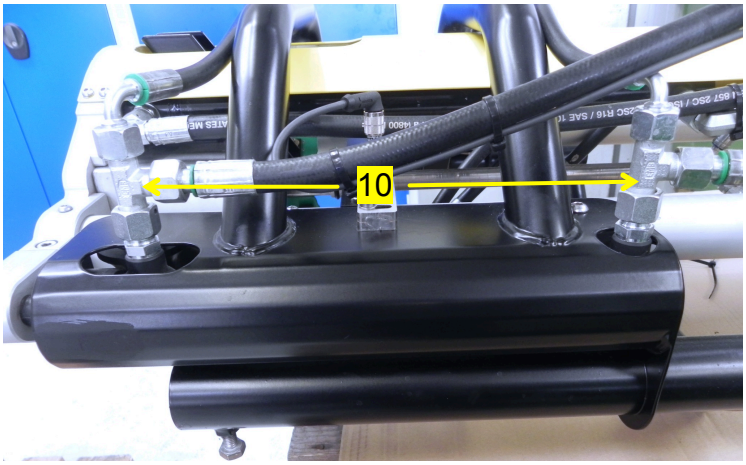

PART NO.	ART. NO.	DESCRIPTION
1	16101067	Manometer 0-160 bar
2	16101068	Manometer 0-60 bar
3	16101069	Pressostat 5-50 bar
4	16101070	4-pole plug
5	16101071	Valve shut-off
6	16101092	Female coupling 3/8”
7	16101093	Male coupling 3/8”
8	16101094	O-ring f. female coupling
9	16101095	Wiper ring
10	16101096	T-adaptor w. compression nut

HYDRAULIC HOSES

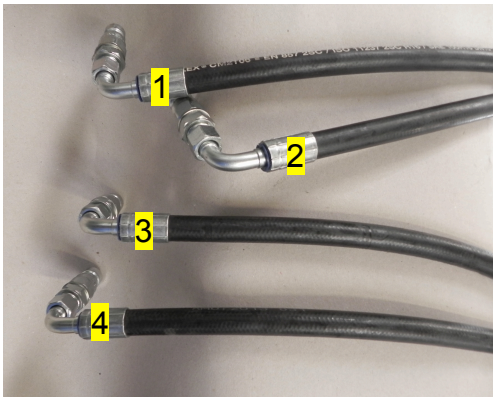

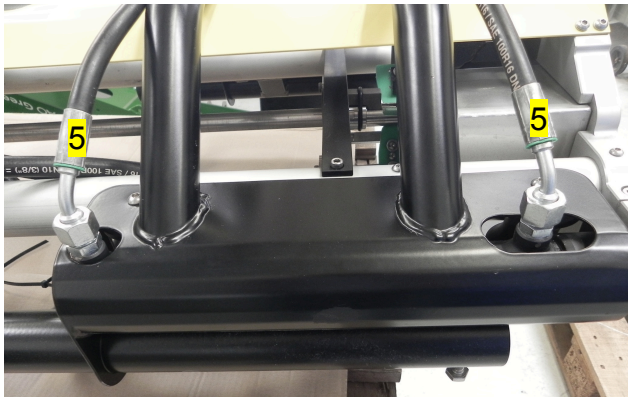

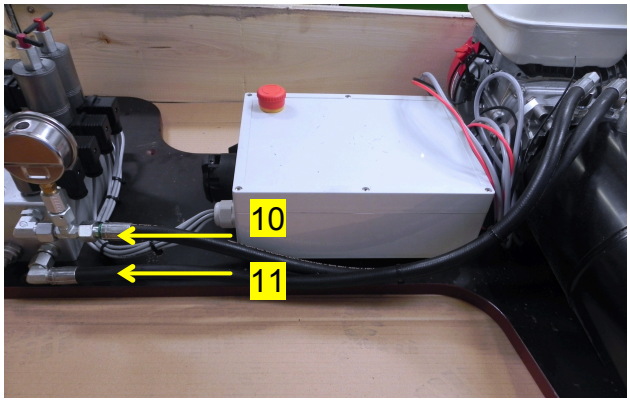

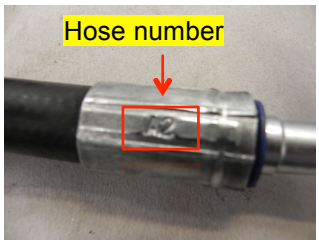

PART NO.	ART. NO.	DESCRIPTION
1	16101097	Hose **A1**, 820 mm
2	16101098	Hose **A2**, 1600 mm
3	16101099	Hose **B1**, 1080 mm
4	16101100	Hose **B2**, 1100 mm
5	16101101	Hose f. Jack cylinder
6	16101102	Hose **A3**, 1640 mm
7	16101103	Hose **B3**, 1700 mm
8	16101104	Hose **H**, 1730 mm
9	16101105	Hose **T2**, 1640 mm
10	16101106	Hose **P**, 780 mm
11	16101107	Hose **T**, 810 mm

ELECTRICITY AND MOTOR

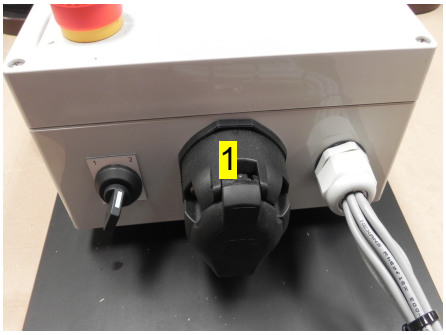

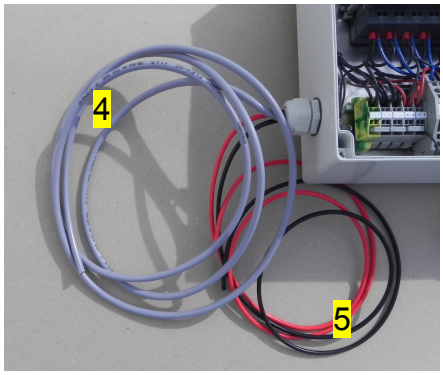

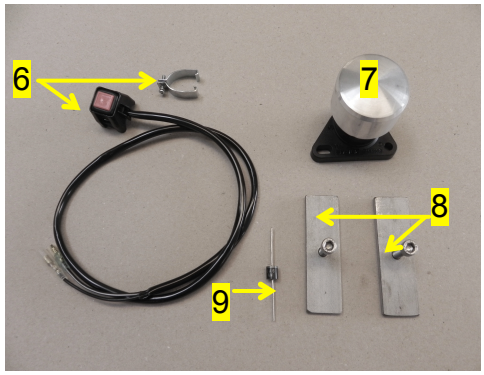

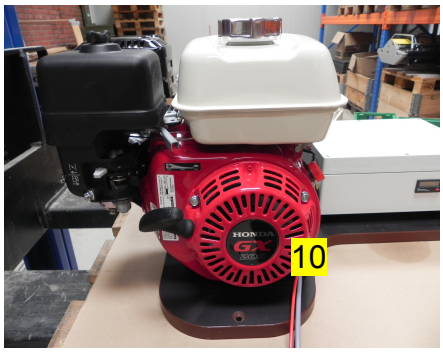

PART NO.	ART. NO.	DESCRIPTION
1	16101108	13-pole female plug
2	16101109	13-pole male plug
3	16101110	Emergency stop
4	16101111	4-wire cable
5	16101112	12 V cable
6	16101113	Start switch
7	16101114	Foot switch
8	16101115	Fitting f. foot switch
9	16101116	Diode
10	16101117	Honda motor 200GX

VARIOUS PARTS

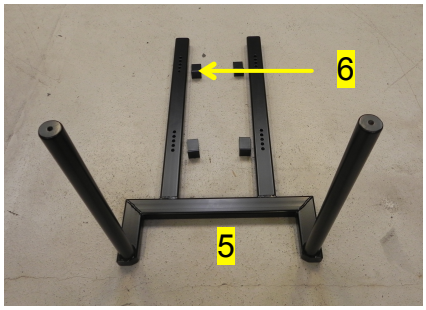

PART NO.	ART. NO.	DESCRIPTION
1	16101118	Funnel f. filling of bags
2	16101119	Support rod
3	16101120	Wintex special key
4	16101121	Label Wintex 2000
5	16101136	Mounting frame
6	16101091	Fitting f. mounting frame